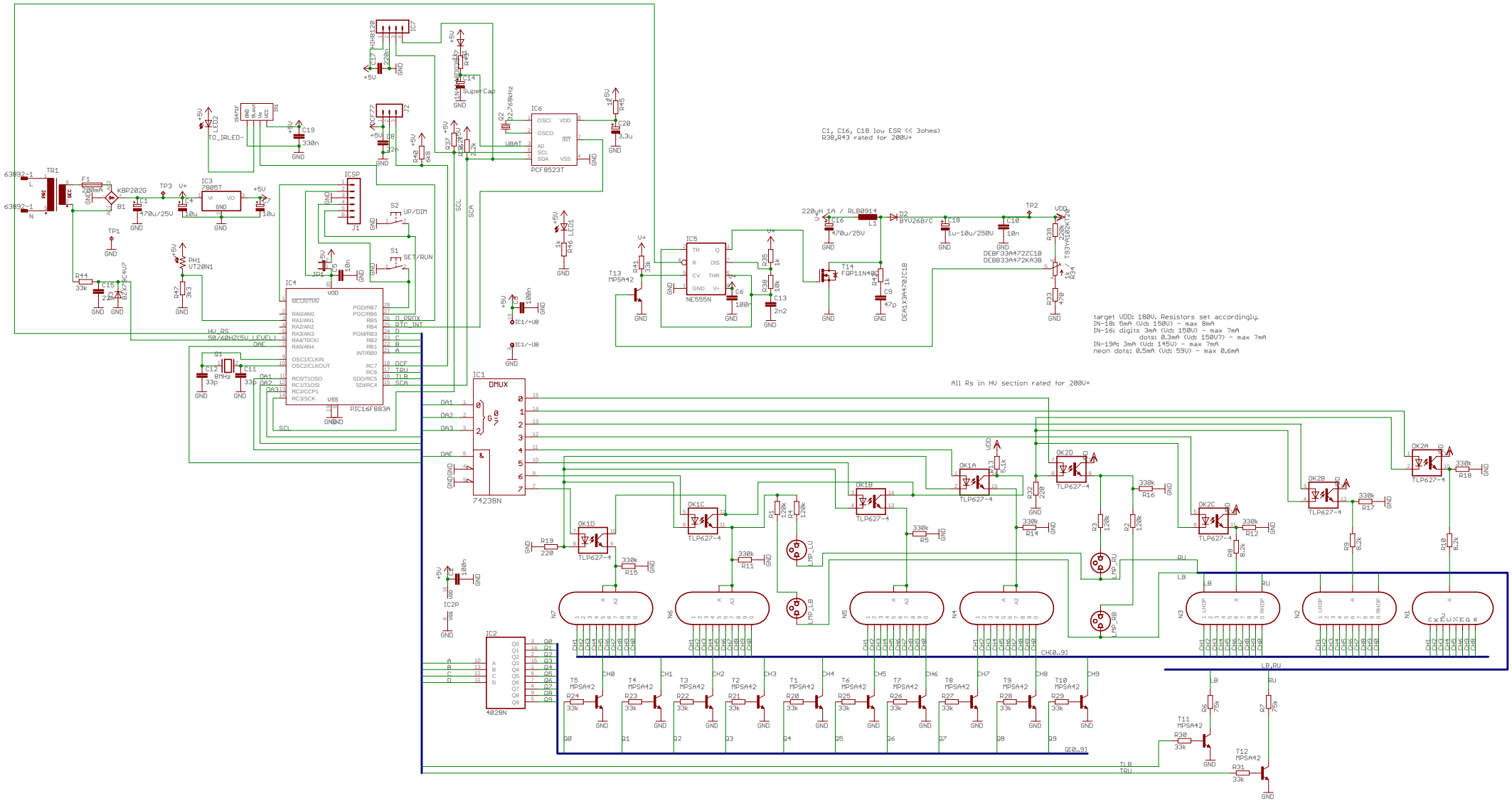
C1, C16, C18 low ESR (< 3ohms)
R38,R43 rated for 200V+
target VDD: 180V. Resistors set accordingly.
IN-18: 5mA (Vd: 150V) - max 8mA
IN-16: digits 3mA (Vd: 150V) - max 7mA
dots: 0.3mA (Vd: 150V?) - max 7mA
IN-19A: 3mA (Vd: 145V) - max 7mA
neon dots: 0.5mA (Vd: 59V) - max 0.6mA
All Rs in HV section rated for 200V+
PIC16F883A
PCF8523T
NE555N
74238N
4028N
DMUX
TLP627-4
MPSA42
BYV26B/C
DEBF33A472ZC1B
DEBB33A472KA3B
DEA1X3A470JC1B
FQP11N40C
TO_IRLED-
SuperCap
UP/DIM
SET/RUN
HV_RS
50/60HZ(5V_LEVEL)
CH[0..9]
Q[0..9]
LB,RU
TLB
TRU